NCR 19-7496

Dart Aerospace Ltd.
1270 Aberdeen St
Hawkesbury, ON
K6A 1K7
Canada

Tel (613) 632-5200
Fax 613 632-5246

D206-642-351
Job Sheet 198513

Part No: D206-642-351 **Job Qty:** 1 pcs

Part Name: Replacement Skidtube, Low & High Gear, Run-on Landing Wearplates Fits LH or RH

Part Weight: 0 lbs **Status:** New **Priority:** Medium

Job Created: 7/30/19 **Job Tracking No:**

Due Date: 9/13/19 **Created By:** Marie Lajeunesse

Type: Stock **Description:**

Note: DWG D4361-041 REV A, IIN-D206-642 REV Q SHEETS 29-30 IPP REV:A NEW ISSUE 12-07-09 JLM VERIFIED BY:EC

Ship Via:

Bill of Materials

Job Routing

Op No	Operation	Qty	Start Date	Due Date	Standard Setup Hrs	Standard Run Hrs	Workcenter / Supplier	Lead Time	Sign-off
110	Skidtubes - 1	1 pcs		9/13/19	0.00	3.26	Skidtubes - 1		
							Skidtubes - 2		
							Skidtubes - 3		
							Skidtubes - 4		
							Skidtubes - 5		
							Skidtubes - 6		
							Skidtubes - 7		
115	QC 5	1 pcs		9/13/19	0.00	0.00	QC 5 - 10		
							QC 5 - 12		
							QC 5 - 17		
							QC 5 - 18		
							QC 5 - 19		
							QC 5 - 22		
							QC 5 - 24		
							QC 5 - 3		
							QC 5 - 43		
							QC 5 - 49		
							QC 5 - 51		
							QC 5 - 58		DAS
							QC 5 - 68		SEP 0 9 2019 68
							QC 5 - 9		9-89
							QC 5 - 50		
							QC 5 - 30		
							QC 5 - 40		
							QC 5 - 61		
							QC 5 - 81		
120	Handfinish - 1-1 Chemical-B4B	1 pcs		9/13/19	0.00	0.83	Handfinish - 1 - 1 - B4B		
							Handfinish - 1 - 2 - B4B		
							Handfinish - 1 - 3 - B4B		SEP 1 0 2019
							Handfinish - 1 - 4 - B4B		

DART AEROSPACE

Dart Aerospace Ltd.
1270 Aberdeen Street
Hawkesbury, ON K6A 1K7
CANADA
TEL.: 1 613 632-5200
Email: sales@dartaero.com
www.dartaerospace.com

Container No: S203600

Part: D206-642-351
Job No: 198513
Serial No/Batch: S203600
Revision:
Inspector:
Exp Date:
Instructions:

Date: 08/07/19

					Handfinish - 1 - 5 - B4B	
					Handfinish - 1 - 6 - B4B	
					Handfinish - 1 - 7 - B4B	
					Handfinish - 1 - 8 - B4B	
					Handfinish - 1 - 9 - B4B	
					Handfinish - 1 - 10 - B4B	
					Handfinish - 1 - 11 - B4B	
					Handfinish - 1 - 12 - B4B	
					Handfinish - 1 - 13 - B4B	
					Handfinish - 1 - 14 - B4B	
					Handfinish - 1 - 15 - B4B	
					Handfinish - 1 - 16 - B4B	
					Handfinish - 1 - 17 - B4B	
					Handfinish - 1 - 18 - B4B	
					Handfinish - 1 - 19 - B4B	
					Handfinish - 1 - 20 - B4B	
					Handfinish - 1 - 21 - B4B	
					Handfinish - 1 - 22 - B4B	
125	QC 7	1 pcs	9/13/19	0.00 0.00	QC 7 - 10	
					QC 7 - 13	
					QC 7 - 14	
					QC 7 - 15	
					QC 7 - 17	
					QC 7 - 18	
					QC 7 - 19	
					QC 7 - 2	
					QC 7 - 28	
					QC 7 - 3	
					QC 7 - 30	
					QC 7 - 34	
					QC 7 - 36	
					QC 7 - 37	
					QC 7 - 41	
					QC 7 - 47	
					QC 7 - 48	
					QC 7 - 51	
					QC 7 - 58	
					QC 7 - 59	
					QC 7 - 60	MCA
					QC 7 - 9	
					QC 7 - 68	
					QC 7 - 50	
					QC 7 - 67	
					QC 7 - 40	
					QC 7 - 24	
					QC 7 - 43	
					QC 7 - 61	
					QC 7 - 81	

130 **Skidtubes - 2 - B4B**	1 pcs	9/13/19	0.00 3.26	Skidtubes - 1 - B4B	DL
				Skidtubes - 2 - B4B	
				Skidtubes - 3 - B4B	
				Skidtubes - 4 - B4B	
				Skidtubes - 5 - B4B	
				Skidtubes - 6 - B4B	
				Skidtubes - 7 - B4B	
140 **QC 5**	1 pcs	9/13/19	0.00 0.00	QC 5 - 10	
				QC 5 - 12	
				QC 5 - 17	
				QC 5 - 18	BE
				QC 5 - 19	
				QC 5 - 22	
				QC 5 - 24	
				QC 5 - 3	
				QC 5 - 43	
				QC 5 - 49	
				QC 5 - 51	
				QC 5 - 58	
				QC 5 - 68	
				QC 5 - 9	
				QC 5 - 50	
				QC 5 - 30	
				QC 5 - 40	
				QC 5 - 61	
				QC 5 - 81	
150 **Skidtubes - 2 - B4B**	1 pcs	9/13/19	0.00 3.26	Skidtubes - 1 - B4B	DO
				Skidtubes - 2 - B4B	
				Skidtubes - 3 - B4B	
				Skidtubes - 4 - B4B	TF
				Skidtubes - 5 - B4B	BE
				Skidtubes - 6 - B4B	
				Skidtubes - 7 - B4B	
170 **QC 10**	1 pcs	9/13/19	0.00 0.00	QC 10 - 10	
				QC 10 - 18	
				QC 10 - 24	DAS 24 9-89
				QC 10 - 43	SEP 23 2019
				QC 10 - 50	
				QC 10 - 58	
				QC 10 - 9	
180 **QC 5**	1 pcs	9/13/19	0.00 0.00	QC 5 - 10	
				QC 5 - 12	
				QC 5 - 17	
				QC 5 - 18	
				QC 5 - 19	
				QC 5 - 22	
				QC 5 - 24	
				QC 5 - 3	
				QC 5 - 43	
				QC 5 - 49	
				QC 5 - 51	
				QC 5 - 58	DAS
				QC 5 - 68	SEP 23 2019 68
				QC 5 - 9	9-89
				QC 5 - 50	
				QC 5 - 30	
				QC 5 - 40	
				QC 5 - 61	
				QC 5 - 81	

190	**Handfinish - 2-1 Pressure- B4B**	1 pcs	9/13/19	0.00 0.50	Handfinish - 2 - 1 - B4B
					Handfinish - 2 - 2 - B4B
					Handfinish - 2 - 3 - B4B
					Handfinish - 2 - 4 - B4B
200	**Powdercoat - 1 White GI(A)- B4B** M193454.	1 pcs	9/13/19	0.00 0.23	Powdercoat - 1 - B4B
					Powdercoat - 2 - B4B
	START: 1045. OUT: 320 FINISH: 11:15				Powdercoat - 3 - B4B
					Powdercoat - 4 - B4B
210	**QC 3**	1 pcs	9/13/19	0.00 0.00	QC 3 - 10
					QC 3 - 13
					QC 3 - 15
					QC 3 - 17
					QC 3 - 18
					QC 3 - 2
					QC 3 - 28
					QC 3 - 3
					QC 3 - 30
					QC 3 - 34
					QC 3 - 36
					QC 3 - 41
					QC 3 - 51
					QC 3 - 58
					QC 3 - 59
					QC 3 - 68
					QC 3 - 9
					QC 3 - 40
					QC 3 - 19
					QC 3 - 43
					QC 3 - 24
					QC 3 - 61
					QC 3 - 81
220	**Handfinish - 4-1-Assembly- B4B**	1 pcs	9/13/19	0.00 0.83	Handfinish - 4 - 1 - B4B
					Handfinish - 4 - 10 - B4B
					Handfinish - 4 - 11 - B4B
					Handfinish - 4 - 12 - B4B
					Handfinish - 4 - 13 - B4B
					Handfinish - 4 - 14 - B4B
					Handfinish - 4 - 15 - B4B
					Handfinish - 4 - 2 - B4B
					Handfinish - 4 - 3 - B4B
					Handfinish - 4 - 4 - B4B
					Handfinish - 4 - 5 - B4B
					Handfinish - 4 - 6 - B4B
					Handfinish - 4 - 7 - B4B
					Handfinish - 4 - 8 - B4B
					Handfinish - 4 - 9 - B4B
230	**QC 3**	1 pcs	9/13/19	0.00 0.00	QC 3 - 10
					QC 3 - 13
					QC 3 - 15
					QC 3 - 17
					QC 3 - 18
					QC 3 - 2
					QC 3 - 28
					QC 3 - 3

SEP 2 4 2019

BK 19-10-3

BEB19-10-04

DAS 59 9-89

				QC 3 - 30	
				QC 3 - 34	
				QC 3 - 36	
				QC 3 - 41	
				QC 3 - 51	
				QC 3 - 58	
				QC 3 - 59	
				QC 3 - 68	
				QC 3 - 9	DAS
				QC 3 - 40	OCT 0 9 2019 40
				QC 3 - 19	9-89
				QC 3 - 43	
				QC 3 - 24	
				QC 3 - 61	
				QC 3 - 81	
240 **QC 5**	1 pcs	9/13/19	0.00 0.00	QC 5 - 10	
				QC 5 - 12	
				QC 5 - 17	
				QC 5 - 18	
				QC 5 - 19	
				QC 5 - 22	
				QC 5 - 24	
				QC 5 - 3	
				QC 5 - 43	
				QC 5 - 49	
				QC 5 - 51	
				QC 5 - 58	
				QC 5 - 68	
				QC 5 - 9	
				QC 5 - 50	
				QC 5 - 30	DAS
				QC 5 - 40	OCT 0 9 2019 40
				QC 5 - 61	9-89
				QC 5 - 81	
250 **Packaging 3-1 - Stock - B4B**	1 pcs	9/13/19	0.00 0.00	Packaging 3 - 1 - B4B	
				Packaging 3 - 2 - B4B	
				Packaging 3 - 3 - B4B	
				Packaging 3 - 4 - B4B	
				Packaging 3 - 5 - B4B	
				Packaging 3 - 6 - B4B	
				Packaging 3 - 7 - B4B	
				Packaging 3 - 8 - B4B	
				Packaging 3 - 9 - B4B	
				Packaging 3 - 10 - B4B	
				Packaging 3 - 11 - B4B	
				Packaging 3 - 12 - B4B	
				Packaging 3 - 13 - B4B	
				Packaging 3 - 14 - B4B	
				Packaging 3 - 15 - B4B	
				Packaging 3 - 16 - B4B	
				Packaging 3 - 17 - B4B	
				Packaging 3 - 18 - B4B	
				Packaging 3 - 19 - B4B	
				Packaging 3 - 20 - B4B	
				Packaging 3 - 21 - B4B	
				Packaging 3 - 22 - B4B	
				Packaging 3 - 23 - B4B	
				Packaging 3 - 24 - B4B	
				Packaging 3 - 25 - B4B	NL 17/10/19

				Packaging 3 - 26 - B4B	
				Packaging 3 - 27 - B4B	
				Packaging 3 - 28 - B4B	
				Packaging 3 - 29 - B4B	
				Packaging 3 - 30 - B4B	
				Packaging 3 - 31 - B4B	
				Packaging 3 - 32 - B4B	
				Packaging 3 - 33 - B4B	
				Packaging 3 - 34 - B4B	
				Packaging 3 - 35 - B4B	
				Packaging 3 - 36 - B4B	DAG 21 9-89 OCT 17 2019
255 **DC - 1 - B4B**	1 pcs	9/13/19	0.00 0.00	DC - 1 - B4B	
				DC - 2 - B4B	
260 **QC 21 - FG**	1 pcs	9/13/19	0.00 0.00	QC 21 - FG - 21	
				QC 21 - FG - 70	
				QC 21 - SA - 53	DAG 21 9-89 OCT 17 2019

Part Op Descriptions:

110 - Skidtubes-2 (Skidtubes) 1-Deburr Fwd edge of tube 2-Remove ridge on inside of Fwd edge of tubeas per Dwg D4361 3-Weld Fwd Cap as per Dwg D4361 Use aluminum rod. Grind D2647 to fit as required. 5-Cut aft end to lenght as per dwg D4361 6-Drill pilot holes using drill Jig DT8168A and DT8168B and DT8025. Most Fwd wearplate hole to be laid out manually. 8-Open Aft Cap Hole using # Drill Bit 9-Open holes for Tow Ring to Ø0.625" as per Dwg D4361, D4361-041 Drilling Detail 10-Remove inner indexing ridge on aft end of skidtubeas per Dwg D4361 11-Deburr and Blow out all chips form inside the tube AIR 138989/139011

115 - QC5 (QC5- Inspect part completeness to step on W/O)

120 - HandFinish1 (Chemical Conversion Coat per QSI005 4.1)

125 - QC7-1 (QC7-Inspect Chemical Conversion Coat)

130 - Skidtubes-2 (Skidtubes) 1-Open holes to finished size as per Dwg D4361, D4361-041 Drilling Detail 2-Countersink crossbolt spacer holes as per Dwg D4361 3-Deburr. Blow out chips. Grind alodine off around crossbolt spacer. 4-Bond D2654-5 web in place as per QSI 015, Ensure holes line up. Allow 12 Hrs. cure time

140 - QC5 (QC5- Inspect part completeness to step on W/O)

150 - Skidtubes-2 (Skidtubes) 1-Prep per QSI 005 and Insert cross bolt spacers D2649. Weld as per QSI 004 and Dwg D4361. Remember to back drill each hole to 0.25" before welding the other side. Use aluminum rod. 2-Grind welds flush as per Dwg D4361. 3-Counterbore 5/16" x 0.750" deep as per Dwg D4361. Deburr 4- Install nut plate as per dwg

170 - QC10 (QC10- Inspect visual per QSI004- ground welds)

180 - QC5 (QC5- Inspect part completeness to step on W/O)

190 - HandFinish2 (Pressure Wash per QSI005 4.3/ Clean and remove all markings)AND ALODINE ONLY AS PER QSI005

200 - Powdercoat1 (White Gloss(Ref:4.3.5.1) per QSI005 4.3-Alum) Make sure Nut Plate Thread is protected using paint screw, and mask GHW studs.

210 - QC3 (QC3- Inspect Part Finish)

220 - HandFinish4 (Assemble as per dwg) 1-Install wearplates as per dwg D4361. 2-Install O-Rings D2651-3 on plugs D2651-1 with Petroleum Jelly and install plugs as per Dwg D4361. Clean excess adhesive 6-Wing Walk as per Dwg D4361-041 and QSI 005 4.4

230 - QC3 (QC3- Inspect Part Finish)

240 - QC5 (QC5- Inspect part completeness to step on W/O)

250 - Packaging3-1 (Identify as per dwg & Stock Location:_____ Identify and pack for shipping as per PPP D206-642-351

255 - DC (Document Control)Photocopy bluefile and create labels per PPP D206-642-351 CHG001

260 - QC21 (QC21- Final Inspection - Work Order Release)

Job BOM

Part / Item	Component Name	Quantity	Operation	Container
D2620	Skidtube, 206 Skidtube	1 pcs (1 ea)	110-Skidtubes - 1	S185582
D2647	Cap	1 pcs (1 ea)	110-Skidtubes - 1	S166098
D2654-5	Web	1 pcs (1 ea)	130-Skidtubes - 2 - B4B	S193849
D2649	Cross Bolt Spacer	23 pcs (23 ea)	150-Skidtubes - 2 - B4B	S199364 AB S214176 x15
AN3-36A	Bolt	9 Ea (9 ea)	220-Handfinish - 4-1-Assembly-B4B	[redacted] S203178
CCR264SS3-3	Cherry Rivet	2 Ea (2 ea)	220-Handfinish - 4-1-Assembly-B4B	S099573.
CR3212-4-3	Cherry Rivet	2 Ea (2 ea)	220-Handfinish - 4-1-Assembly-B4B	S163230-3
D2646	Aft Cap	1 pcs (1 ea)	220-Handfinish - 4-1-Assembly-B4B	S160607.
D2651-1	Plug	4 pcs (4 ea)	220-Handfinish - 4-1-Assembly-B4B	S196044.
D2651-3	O-Ring	4 pcs (4 ea)	220-Handfinish - 4-1-Assembly-B4B	S180320
D2680-041	Nut Plate	1 pcs (1 ea)	220-Handfinish - 4-1-Assembly-B4B	S197646.
D3873-1	Bushing	18 pcs (18 ea)	220-Handfinish - 4-1-Assembly-B4B	S215514.
D4364-041	Run-on Landing Wearplate Fwd	1 pcs (1 ea)	220-Handfinish - 4-1-Assembly-B4B	S163894.
D4364-043	Run-on Landing Wearplate Aft	1 pcs (1 ea)	220-Handfinish - 4-1-Assembly-B4B	S213100
MS21042-3	Nut use MS21042L3 per QSI 017	9 Ea (9 ea)	220-Handfinish - 4-1-Assembly-B4B	S160258
MS27039-1-08	Screw	2 Ea (2 ea)	220-Handfinish - 4-1-Assembly-B4B	S162897.
MS27039-4-06	Screw	1 Ea (1 ea)	220-Handfinish - 4-1-Assembly-B4B	S166974-3
NAS1149C0332R	Washer (AN960C10L)	9 Ea (9 ea)	220-Handfinish - 4-1-Assembly-B4B	S193136.
NAS1149D0332J	Washer	2 Ea (2 ea)	220-Handfinish - 4-1-Assembly-B4B	S178378
NAS1149D0463J	Washer	1 Ea (1 ea)	220-Handfinish - 4-1-Assembly-B4B	S158585

M.U. 012278

Job Allocations

Operation	Component Part	Required	Inventory	Allocated
110-Skidtubes - 1	D2620	1	7	0
	D2647	1	32	0
130-Skidtubes - 2 - B4B	D2654-5	1	9	0
150-Skidtubes - 2 - B4B	D2649	23	31	0
220-Handfinish - 4-1-Assembly-B4B	AN3-36A	9	79	0
	CCR264SS3-3	2	109	0
	CR3212-4-3	2	157	0
	D2646	1	71	0
	D2651-1	4	321	0
	D2651-3	4	241	0
	D2680-041	1	37	0
	D3873-1	18	36	0
	D4364-041	1	5	0
	D4364-043	1	0	0
	MS21042-3	9	513	0
	MS27039-1-08	2	415	0
	MS27039-4-06	1	88	0
	NAS1149C0332R	9	3,724	0
	NAS1149D0332J	2	2,553	0
	NAS1149D0463J	1	4,922	0

Part Specifications

Specifications could not be found.

Plex 7/30/19 11:53 AM Dart.lajeunesse.marie

QTY -041	QTY -043	PART NUMBER	DESCRIPTION
X		D4361-041	SKIDTUBE ASSY
	X	D4361-043	SKIDTUBE ASSY
1	1	D2600-1-160	EXTRUSION
1		D2654-5	WEB
	1	D2654-7	WEB
1	1	D2646	AFT CAP
1	1	D2647	CAP
23	26	D2649	CROSS BOLT SPACER
4	6	D2651-1	PLUG
4	6	D2651-3	O-RING
1	1	D2680-041	NUT PLATE
18	20	D3873-1	BUSHING
1		D4364-041	FWD WEARPLATE ASSY
1		D4364-043	AFT WEARPLATE ASSY
	1	D4366-041	FWD WEARPLATE ASSY
	1	D4366-043	AFT WEARPLATE ASSY
9	10	AN3-36A	BOLT
9	10	NAS1149C0332R	WASHER (OR AN960C10L)
9	10	MS21042-3	NUT
2	2	NAS1149D0332J	WASHER (OR AN960JD10L)
2	2	CCR264SS3-3	RIVET
2	2	CR3212-4-03	RIVET
2	2	MS27039-1-08	SCREW
1	1	MS27039-4-08	SCREW
1	1	NAS1149D0463J	WASHER (OR AN960JD416)

SHOP COPY
RETURN TO
ENGINEERING
UNCONTROLLED COPY
SUBJECT TO AMENDMENT
WITHOUT NOTICE
WORK ORDER
NO. 198513 MLG
9073

RELEASED
2011-09-12
JMP

NOTES:
1) MATERIAL: N/A
2) FINISH: -CHEMICAL CONVERSION COAT PER DART QSI 005 4.1 PRIOR TO INSTALLING D2654-5/-7 WEB
-POWDER COAT WHITE (REF 4.3.5.1) PER DART QSI 005 4.3
-BLACK ANTI-SKID PAINT AS INDICATED TO 0.5 ABOVE LOCATION RIDGE PER DART QSI 005 4.4
3) TOLERANCES: PER DART QSI 018 UNLESS OTHERWISE NOTED
4) UNITS: INCHES UNLESS OTHERWISE NOTED
5) BREAK SHARP EDGES: 0.005 TO 0.010 MAX
6) IDENTIFICATION: NONE
7) WEIGHT: D4361-041 = 37.5 LBS
D4361-043 = 44.3 LBS
8) WELD PER DART QSI 004
9) DAMAGE TOLERANCE ON FWD BEND:
THERE SHOULD BE NO VISIBLE WRINKLES IN THE BEND FROM THE GROUND TO A HEIGHT OF 5 INCHES ABOVE THE GROUND. IT IS ACCEPTABLE TO POLISH OUT GOUGES UP TO 0.020 DEEP IN THE BENT PORTION OF THE TUBE. A MAXIMUM REDUCTION IN DIAMETER OF 0.150" IS ACCEPTABLE IN THE BENT PORTION OF THE TUBE.
10) BOND WEB INTO OUTER TUBE WITH SIKAFLEX-241/-291 ADHESIVE PER DART QSI 015
11) INSERT D2651-1 PLUG C/W D2651-3 O-RING IN HOLES MARKED 'P' (BOTH SIDES OF TUBE)

REV.	DESCRIPTION	BY	DATE
A	NEW ISSUE	SC	11.05.05

DESIGN	SC
DRAWN	SC
CHECKED	
MFG. APPR.	
APPROVED	
DE APPR.	
DATE	11.05.05

DART AEROSPACE USA, INC
PORT HADLOCK, WA

DRAWING NO. D4361 REV. A
SHEET 1 OF 4
TITLE 206L/407 SKIDTUBE ASSEMBLIES
SCALE NTS

COPYRIGHT © 2011 BY DART AEROSPACE USA, INC
THIS DOCUMENT IS PRIVATE AND CONFIDENTIAL AND IS SUPPLIED ON THE EXPRESS CONDITION THAT IT IS NOT TO BE USED FOR ANY PURPOSE OR COPIED OR DISCLOSED TO ANY OTHER PERSON WITHOUT WRITTEN PERMISSION FROM DART AEROSPACE USA, INC.

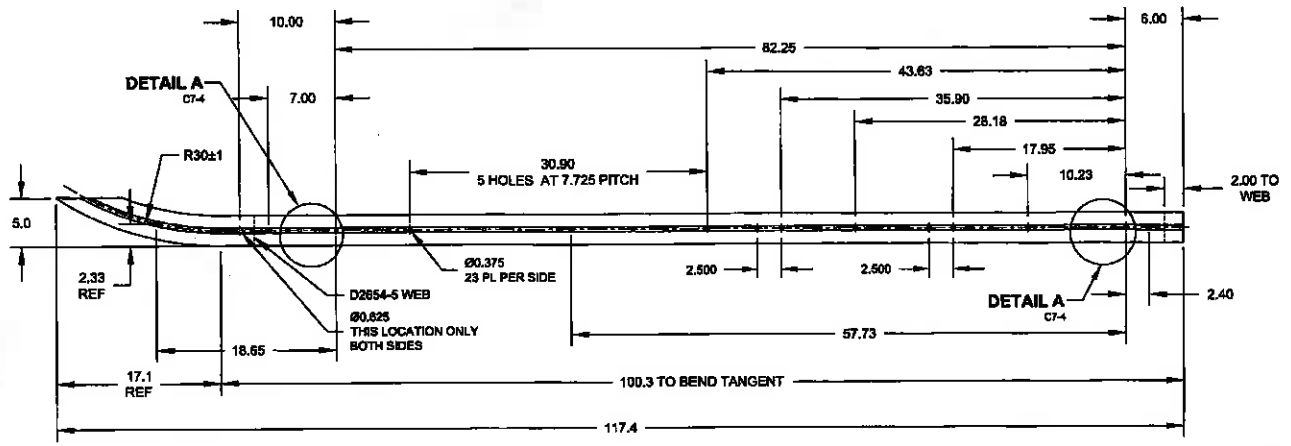

D4361-041 BENDING/DRILLING DETAIL

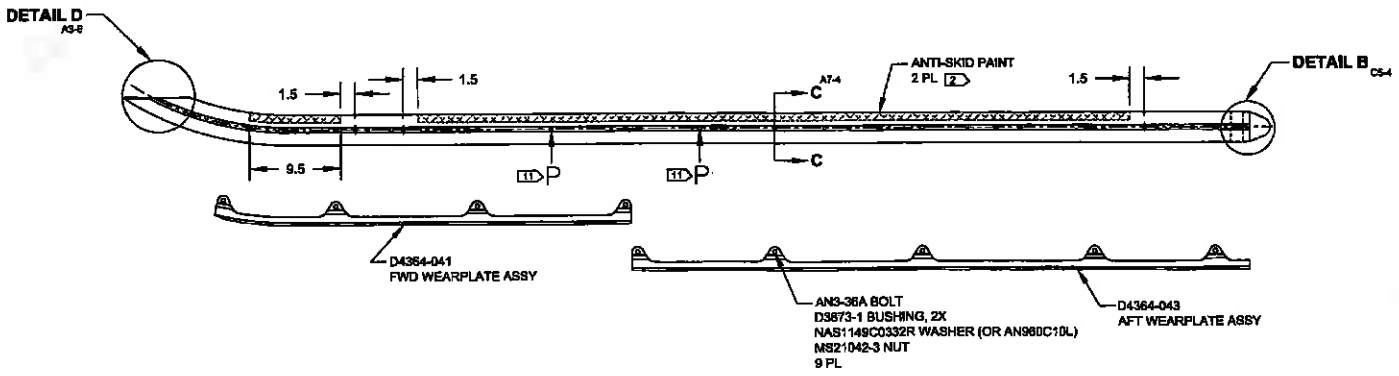

D4361-041 ASSEMBLY/FINISHING DETAIL

RELEASED
2011-09-12

DESIGN	SC	DART AEROSPACE USA, INC
DRAWN	SC	PORT HADLOCK, WA
CHECKED		DRAWING NO. REV. A
MFG. APPR.		D4361 SHEET 2 OF 4
APPROVED		TITLE SCALE
DE APPR.		206L/407 SKIDTUBE ASSEMBLIES NTS
DATE 11.05.05		

COPYRIGHT © 2011 BY DART AEROSPACE USA, INC
THIS DOCUMENT IS PRIVATE AND CONFIDENTIAL AND IS SUPPLIED ON THE EXPRESS CONDITION THAT IT IS NOT TO BE USED FOR ANY PURPOSE OR COPIED OR COMMUNICATED TO ANY OTHER PERSON WITHOUT WRITTEN PERMISSION FROM DART AEROSPACE USA, INC.

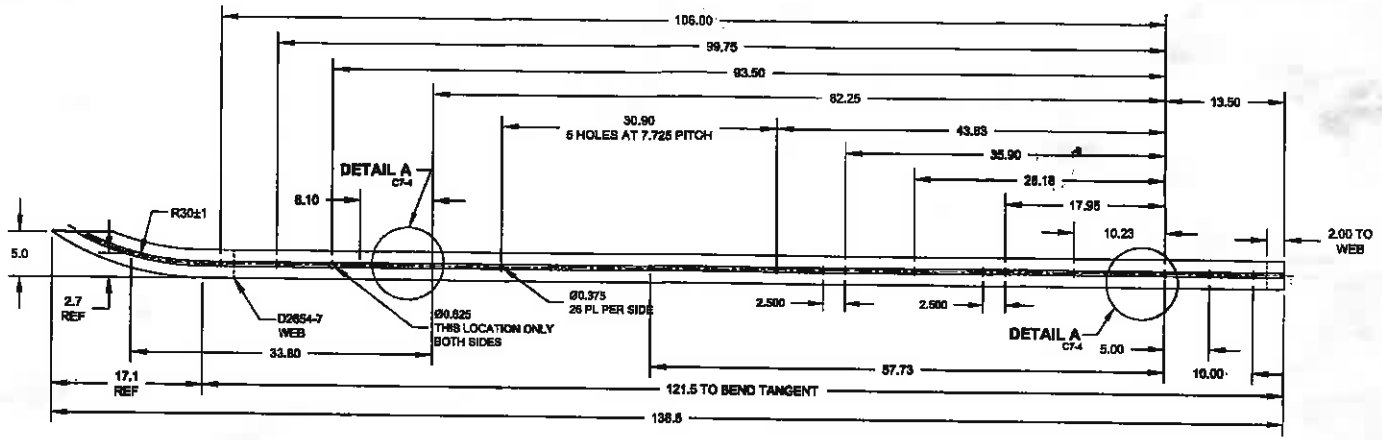

D4361-043 BENDING/DRILL DETAIL

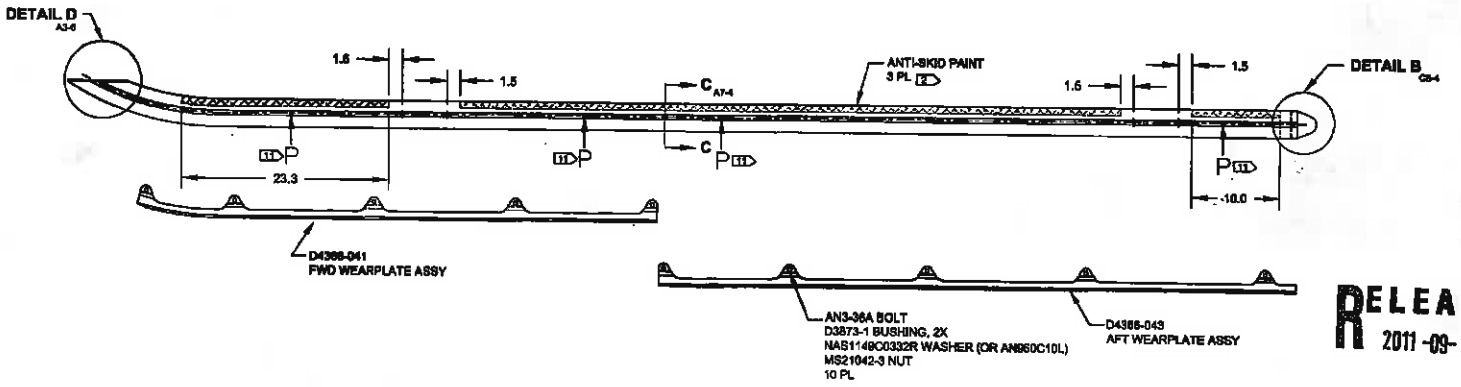

RELEASED
2011-09-12

D4361-043 ASSEMBLY/FINISHING DETAIL

DESIGN	SC	DART AEROSPACE USA, INC
DRAWN	SC	PORT HADLOCK, WA
CHECKED		DRAWING NO. D4361 REV. A
MFG. APPR.		SHEET 3 OF 4
APPROVED		TITLE 206L/407 SKIDTUBE ASSEMBLIES
DE APPR.		SCALE NTS
DATE 11.05.05		

COPYRIGHT © 2011 BY DART AEROSPACE USA, INC
THIS DOCUMENT IS PRIVATE AND CONFIDENTIAL, AND IS SUPPLIED ON THE EXPRESS CONDITION THAT IT IS NOT TO BE USED FOR ANY PURPOSE OR DISCLOSED TO ANY OTHER PERSON WITHOUT WRITTEN PERMISSION FROM DART AEROSPACE USA, INC.

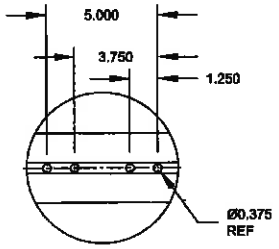

DETAIL A C3-2, D7-2, C3-3, D8-3

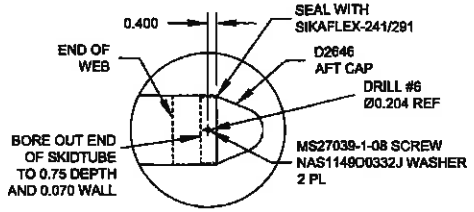

DETAIL B B2-2, B1-3

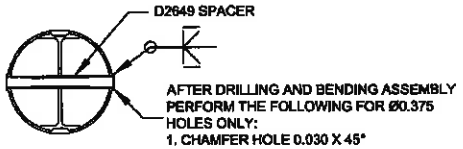

SECTION C-C
FOR Ø0.375 HOLES ONLY B4-2, B5-3

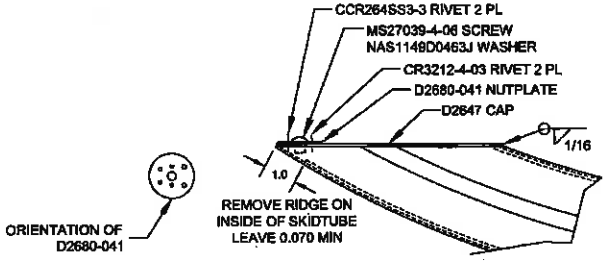

DETAIL D B7-2, B7-3

DETAIL D NOTES:

1. CUT TUBE LEVEL
2. REMOVE RIDGE ON FWD SIDE
3. LOCATE D2647 (TRIM AS NECESSARY)
4. WELD D2647 IN PLACE PER DART QSI 004
5. GRIND FLUSH
6. RIVET D2680-041 NUT PLATE IN PLACE

NOTE: MASK THREADS IN D2680-041 PRIOR TO FINISH

RELEASED
2011-09-12

DESIGN	SC	DART AEROSPACE USA, INC	
DRAWN	SC	PORT HADLOCK, WA	
CHECKED		DRAWING NO.	REV. A
MFG. APPR.		D4361	SHEET 4 OF 4
APPROVED		TITLE	SCALE
DE APPR.		206L/407 SKIDTUBE ASSEMBLIES	NTS
DATE	11.05.05		

COPYRIGHT © 2011 BY DART AEROSPACE USA, INC
THIS DOCUMENT IS PRIVATE AND CONFIDENTIAL AND IS SUPPLIED ON THE EXPRESS CONDITION THAT IT IS NOT TO BE USED FOR ANY PURPOSES OR COPIED OR COMMUNICATED TO ANY OTHER PERSON WITHOUT WRITTEN PERMISSION FROM DART AEROSPACE USA, INC.

Entered: _____ Date: _____

DART AEROSPACE

WORK ORDER NON-CONFORMANCE / ROUTE UPDATE

NCR No.

Route update only ☐

Job: _____

Part No. _____

DISPOSITION

Rework ☐
Scrap ☐
Use-as-is ☐

DEPARTMENT/PROCESS

Skid-tube ☐ Cross tube ☐ Eng. (Non-AW) ☐ Engineering ☒
Machining ☐ Small Fab ☐ Prod. Eng. Coor. ☐ Water Jet ☐
Large Fab ☐ Finishing ☐ Rec/Store/Packaging ☐ Supplier ☐
Quality ☐

Date :

Sequence #:

QTY Affected :

MRB (QSI042)

NO
19/05/07

Description Work Order Deviation

Tow Ring hole is ϕ0.625 per dwg
Tow Ring is ϕ 0.625 ± 0.010"

Disposition

Drill Tow Ring hole at ϕ0.620
Ref D3274, D4362

Completed By

Lead hand / Supervisor

QC / QA Coordinator

Root Cause

Operator ☐
Manufacturing Process ☐
Equip/Tooling ☐
Handling/Presservation ☐
Material ☐
Product Improvement ☐
Process Improvement ☐
Human Factors ☐

FAULT CATEGORY

☐ Pressure/Forced
☐ Bending
☐ Crushing
☐ Cracks
☐ Crimp/Kink/Ripple/Wave/Twist
☐ Marks/Chatter
☐ Mislabeled
☐ Contamination
☐ Misaligned/off center
☐ BOM/Route
☐ Broken/Damage/Defect
☐ Incomplete/Unclear Instructions
☐ Drill Holes
☐ Fit/Function
☐ Power Loss/Surge
☐ Folio/Program
☐ Grain Direction
☐ Weld
☐ Wrong Stock Pulled
☐ Out of Sequence
☐ Off-set/Set-up
☐ Positioned Wrong
☐ Outside Tolerance
☐ Drawing
☐ Finish
☐ Part Lost/Missing
☐ Misread

Other/Details:

Entered: LK Date: Oct 23/19

WORK ORDER NON-CONFORMANCE / ROUTE UPDATE

NCR No. 19-7496.

Route update only ☐

Job: 198518

Part No. D906-642-351

DISPOSITION

Rework ☒
Scrap ☐
Use-as-is ☐

DEPARTMENT/PROCESS

Skid-tube ☒ | Cross tube ☐ | Eng. (Non-AW) ☐ | Engineering ☐
Machining ☐ | Small Fab ☐ | Prod. Eng. Coor. ☐ | Water Jet ☐
Large Fab ☐ | Finishing ☐ | Rec/Store/Packaging ☐ | Supplier ☐
Quality ☐

Date : 19/9/12

Sequence #:

QTY Affected : 1

MRB (QSI042)

INSP 12 9/16/12

Description Work Order Deviation

Aft wearplate hole was drilled from aft end ~~instead~~ instead of ~~from~~ saddle hole.

Disposition

Acceptable to fill mis-drilled hole with weld. At 1.2" hole spacing, mis-drilled hole is sufficient ~~distance~~ distance.

Completed By

BE 19/9/12

Lead hand / Supervisor

JW 19-09-12

QC / QA Coordinator

DAS 68 9-89 SEP 12 2019

Root Cause

Operator ☑
Manufacturing Process ☐
Equip/Tooling ☐
Handling/Presservation ☐
Material ☐
Product Improvement ☐
Process Improvement ☐
Human Factors ☐

FAULT CATEGORY

☐ Pressure/Forced
☐ Bending
☐ Crushing
☐ Cracks
☐ Crimp/Kink/Ripple/Wave/Twist
☐ Marks/Chatter
☐ Mislabeled
☐ Contamination
☐ Misaligned/off center
☐ BOM/Route
☐ Broken/Damage/Defect
☐ Incomplete/Unclear Instructions
☐ Drill Holes
☐ Fit/Function
☐ Power Loss/Surge
☐ Folio/Program
☐ Grain Direction
☐ Weld
☐ Wrong Stock Pulled
☐ Out of Sequence
☐ Off-set/Set-up
☑ Positioned Wrong
☐ Outside Tolerance
☐ Drawing
☐ Finish
☐ Part Lost/Missing
☐ Misread

Other/Details: